OPERATION MANUAL

Aneuvas Technologies, Incorporated

Aneuvas Technologies Inc. Portable Medical Bench

Team Members: *Hunter Daniel, Katherine Riffle, Kenyon Rowley*

Faculty Advisor: *Timothy Becker*

Instructor: *Sarah Oman*

TABLE OF CONTENTS

Disclaimer

This operation manual was prepared by students as part of a university course requirement. While considerable effort has been put into the project, it is not the work of licensed engineers and has not undergone the extensive verification that is common in the profession. The information, data, conclusions, and content of this report should not be relied on or utilized without thorough, independent testing and verification. University faculty members may have been associated with this project as advisors, sponsors, or course instructors, but as such they are not responsible for the accuracy of results or conclusions.

1 Overview

The portable bench was designed in order to safely transport the experimental blood flow model across the Wettaw biology building. The bench is made up of five major components: the tabletop, frame, wheels, storage, and wedges/wedge grooves. Currently with the design, all five components are complete and are ready for assembly. The team planned to have a gutter tray and a handle for the bench but were unable to complete those.

2 Assembly/Disassembly

2.1 Assembly Instructions

The following will describe how to assemble the portable bench. To perform all assembly steps, it is recommended to have at least two people. Before beginning, make sure all five components are present and that all are free of damages. Tools that will be required for the install are a socket set (or wrench set), drill with hex drill bit, a metal grinder, tape measure, clamps, and a rag. Additional materials that will be needed are 1.5" screws (or 1", *see step 4)*, metal brackets (optional, *see step 4*) and heavy-duty epoxy (or gorilla glue, *see troubleshooting).*

2.1.1 Step 1

Take the frame and flip it on its back so that the bolt plates are facing upwards. Prepare all four wheels and 16 bolts, nuts, and washers to be assembled (there is 25 of each in case of needed spare parts). The wheels that swivel will be installed on the left side of the frame when you are facing the frame and it is upright, and the rigid wheels will be installed on the right side of the frame. Put all bolts in from the top and install the nuts and washers on the underside. Make sure to tighten the bolts so that there is equal pressure on each caster. They must be installed this way for the swivel wheels to operate properly. Install each wheel one at a time and then flip the frame and wheels assembly back into the upright position. Before moving to the next step, be sure that the two locking wheels are locked. Figure three below will show where you should be up to this point.

Figure 1: Frame

Figure 2: Caster Wheels

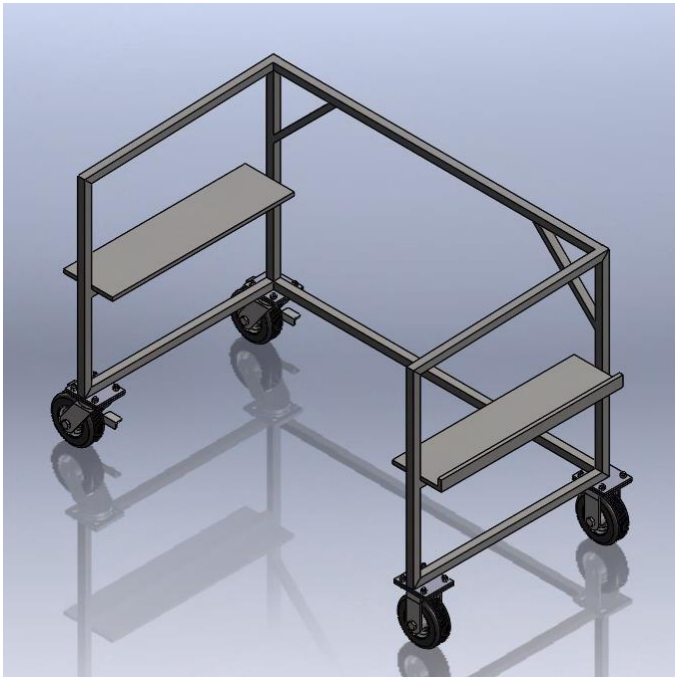

Figure 3: Frame and wheels assembly after completion of step 1

2.1.2 Step 2

Prepare the storage by removing the drawer on the left side in order to make it easier and safer to assemble. The storage will be placed inside the frame, below the shelves. The storage was requested to be removable by the client so the storage will not be attached to the frame. Some grinding of the metal frame on the inside may be required in order for the storage to fit. Grind away a little bit of metal at a time, and then try inserting the storage, drawer side first, from the right side of the frame. The storage should be snug on the non-drawer side and may require being tapped with a hammer to fit all the way in. For correct installation, make sure the drawer is on the outside of the left side of the frame. Figure five will show progress up to this point.

Figure 4: Constructed Storage

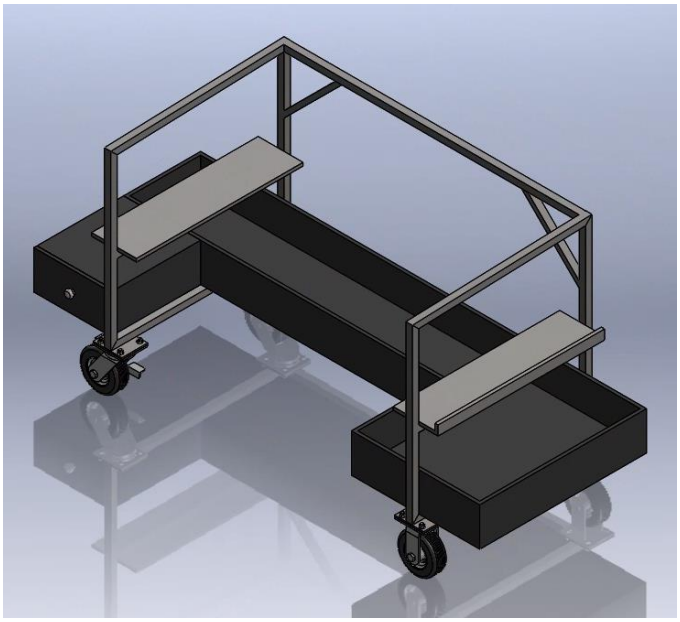

Figure 5: Completion of step 2

2.1.3 Step 3

Set aside the frame and storage for now and grab the tabletop, wedges, and wedge grooves. Also grab the heavy-duty epoxy. This step will be attaching the wedges and wedge grooves to the tabletop. Dry place the wedges and wedge grooves on top of the tabletop and possibly grind until both line up. Make sure that the wedges are placed so that the tall side of the wedge is placed at the front of the tabletop, and that the

2” side of the wedge grooves are also placed in front. Refer to figure nine for more information. Measure 12 inches from the right and left edge of both sides of the tabletop and make a mark. Both wedges will be placed on the inside of the marks and the cleanroom will sit on top of them. If possible, place the cleanroom on top of the tabletop to make sure that it will line up with the marks that were just made and adjust as necessary. Epoxy both wedges to the tabletop as lined up before, with the square edge of the wedge at the front of the tabletop. Follow specific directions from epoxy for installation. Make sure to wipe excess epoxy off right away with a rag. After those are set in, epoxy both wedge grooves on the outside of the wedges, so that they are pressed against the wedges. Let the epoxy set as instructed from the directions. Test to make sure that the cleanroom will slide on to the wedges. Figure nine will show progress up to this point.

Figure 6: Manufactured Tabletop

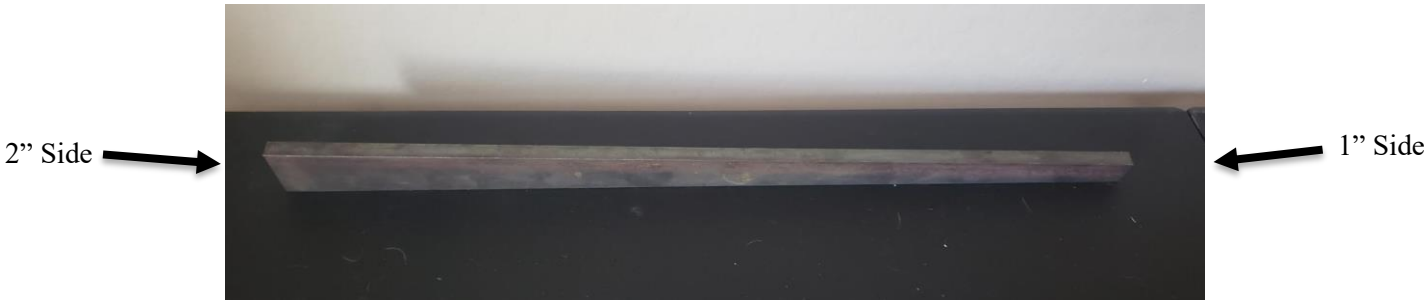

Figure 7: Wedge Groove

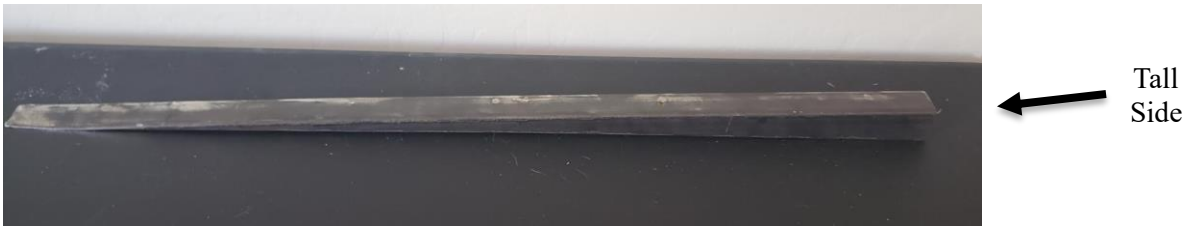

Figure 8: Wedge

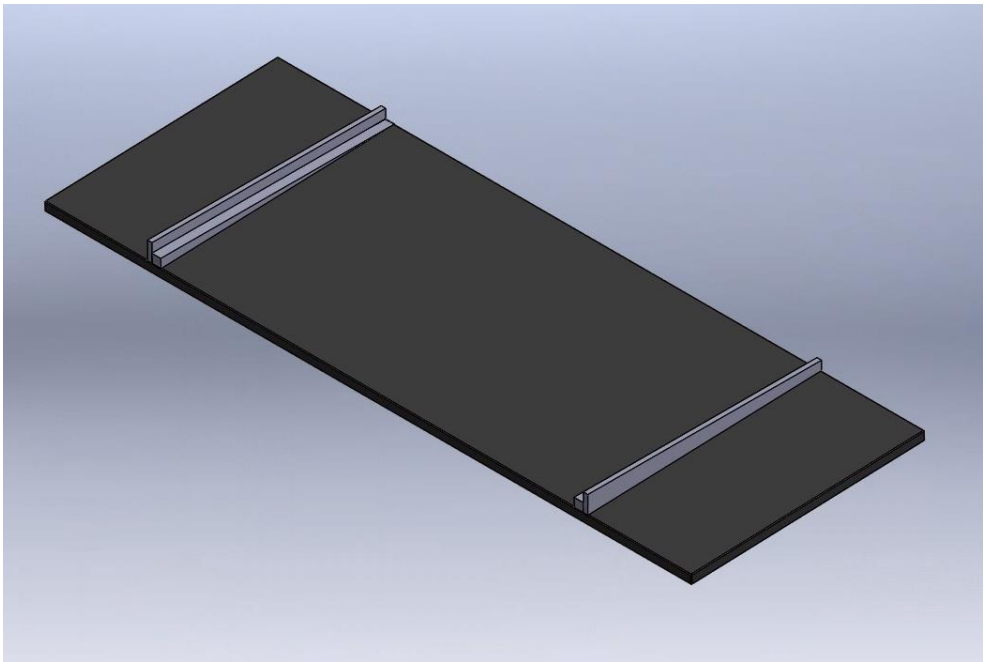

Figure 9: Tabletop after step 3

2.1.4 Step 4

This step will entail assembling the tabletop to the frame. Set the tabletop on top of the frame so that the back of the tabletop lines up with the back of the frame. Also measure from the side of the tabletop to the side of the frame, this should measure 12 inches. If done correctly, the wedges should line up exactly with the bars of the frame below the tabletop. Check and adjust as necessary. Clamp down the tabletop so it cannot move during installation. For attaching the tabletop to the frame, there are two options (which will both be outlined here). Option one: Screw up through the frame into the tabletop. The frame is made from metal tubing so this would work well. Option two: Use metal strapping and bend it into the desired shape to screw up into the tabletop and into the frame. Using option one, you would need 1.5” screws and using option two you would need 1” screws. For option one, the team would recommend using at least 10 screws to ensure the tabletop is solid enough. For option two, at least four metal brackets should be used. Make sure to apply even pressure to the tabletop by screwing in one at a time and alternating sides. After completion of this step, the full portable bench assembly will be complete. The next step would entail installing the cleanroom and filter.

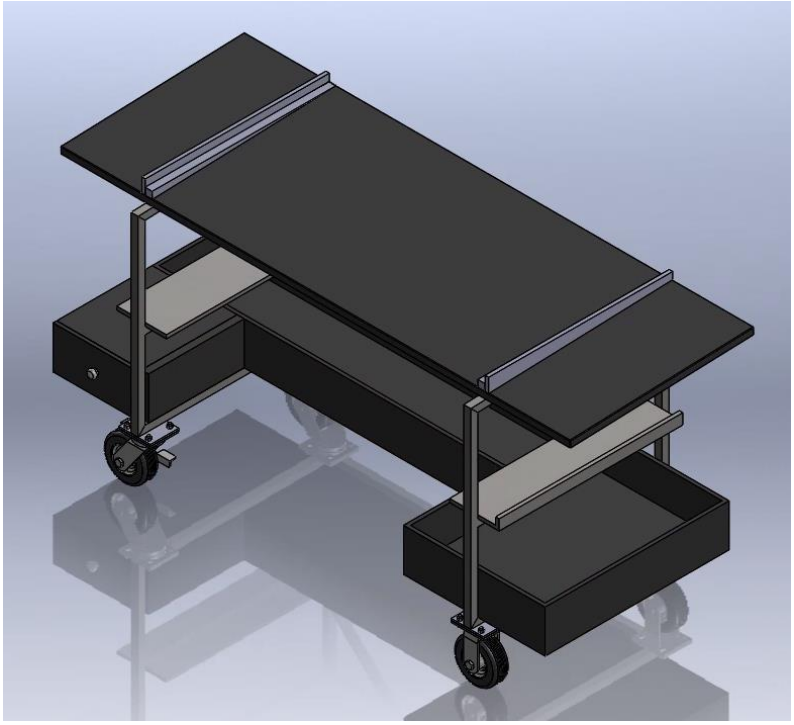

Figure 10: Completely assembled bench after completion of step 4

2.2 Disassembly Instructions

The full bench can be disassembled from each other, other than the wedges and wedge grooves from the tabletop. It is recommended to have at least two people for disassembly. Before starting step one, ensure that the wheels are in the locked position.

2.2.1 Step 1

This step will remove the storage from the frame. Depending on installation, this might require a hammer. Push or hammer on the side without the drawer until it comes loose. Once the storage is loose, use two people to remove it.

2.2.2 Step 2

This step will remove the tabletop from the frame. Make sure one person is holding the tabletop while the other is unscrewing it. Go underneath the tabletop with a drill. Depending on how installation was performed (see step four of assembly) will determine how this will go. For disassembly, make sure to unscrew so that even pressure is applied to the tabletop. This will entail taking screws out one at a time and alternating sides. Once all screws are out, stand up and hold the opposite side of the tabletop. Both people can now remove the tabletop and place it where desired.

2.2.3 Step 3

Now with the frame and caster wheels left, flip the frame on its backside so that the wheels are facing the sky. Remove each wheel one at a time using a socket set or a wrench, making sure to loosen the bolts easily without damaging the caster wheels, or the bolt plate. The bolts were selected with the thought of reusing them so when reassembling, the same bolts can be used. Once all four caster wheels are removed, flip the frame back over so its upright. Disassembly is complete.

3 Operation

Once completion of all assembly steps has been met, operation may begin. If using the bench as a cleanroom, placing the cleanroom and filter will need to be completed first. If using as a desk, the bench is ready. For the purposes of this manual, full operation with the cleanroom and filter will be discussed. Once both have been placed on the bench, the bench is ready to be utilized. Before moving the portable bench, make sure to put a clamp on both sides of the cleanroom attached to the wedges to make sure that the cleanroom is stable. Also make sure that the filter is stored underneath, and not on top. If on top, it is possible for the bench to tip over. The wheels should be in the unlocked position. Once all of these have been met, it is now safe to transport the portable bench. Once in its desired location, make sure to lock the wheels so that the bench cannot shift. It is also safe to remove the clamps from the cleanroom. These are only required while moving.

4 Maintenance

The bench was designed to be as low maintenance as possible. Inspect the bench before each use. Check all hardware for any signs of rusting. Check to make sure that the wheels are in good operating condition, and that all bolts, nuts, and washers are not sheared. Included is extra nuts, bolts, and washers so if any incur any damage, can be replaced. The wheels were designed to be removable, so in case one gets damaged, wheels can be replaced. Look for cracks in the storage. Continuously wipe down the tabletop after each use. All parts that can be purchased at a local hardware store or online: bolts, nuts, washers, caster wheels. These links will be shown below. Refer to full bill of materials for all materials.

Table 1: Link to Replacement Parts

Part/Links to Cost
Caster Wheel (rigid)
Caster Wheel (swivel with brake)
Hex Bolts
Hex Nut
Flat Washer

5 Troubleshooting

Putting a thin, rubber divider between the bolt plate on the frame and the plate on the wheels will mitigate metal rubbing against each other and could extend the life of the device. The current design of the actual

storage built does not have a piece of wood on the right side of the drawer for extra support, however this might be necessary for supporting the drawer. This piece would sit right on the frame support. The design might also need something to hold the storage onto the frame, because it is not going to be attached in any way, it could possibly fall out. This is shown in figure 11 below.

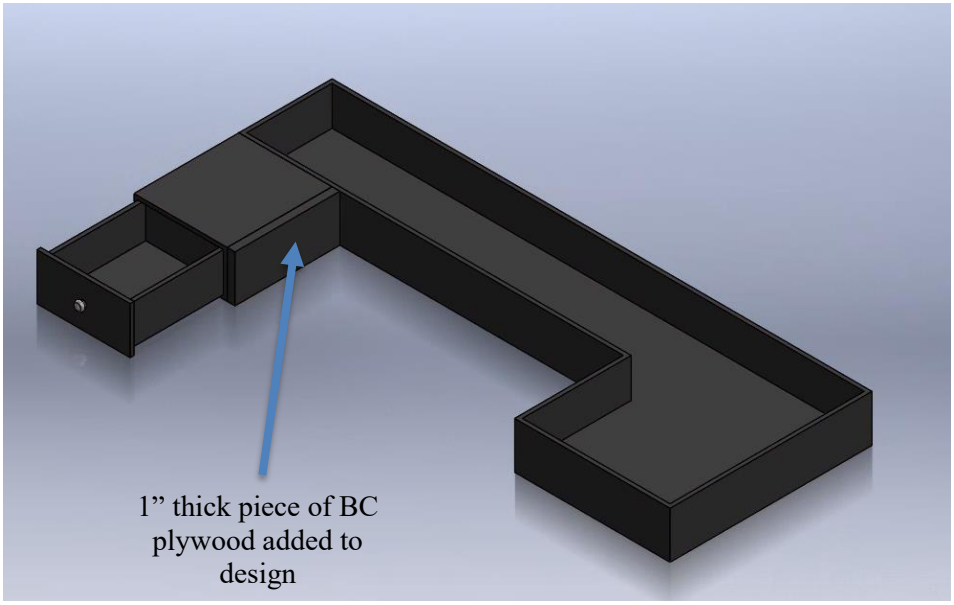

Figure 11: Storage with improvement

It would be smart to attach some type of fabric to the wedge and wedge groove to give the cleanroom something to slide on, and also so there is not metal rubbing on metal. Also, if desired, instead of epoxy, you can use heavy-duty gorilla glue. Either would be strong enough. In step four of installation, if choosing option two, make sure to leave enough room for the cleanroom filter to slide under the tabletop onto the shelf.